EXPLODED VIEW: EV ENCLOSURE C2 2.4L G2 TURBO

DRAWING #: 0J8688

GROUP F

ITEM	PART#	QTY.	DESCRIPTION
(2)1	0G80180AL0R	1	REAR WRAP C2 G2 60KW
(1)2	0C2454	48	SCREW THF M6-1 X 16 N WA Z/JS
(2)3	0F58490AL0R	2	DOOR C2
4	087233	2	RIVET POP .1875 X .450 SS
(1)5	0E3257	10	SCREW TH-FRM M6 W/CAP SHKPRF W
(2)6	0F58520AL0R	2	DUCT DSCHRG LH&RH
(2)7	0F98330AL0R	2	FRONT CORNERS C2
(2)8	0F58510AL0R	1	DUCT DISCHARGE C2
9	049813	2	NUT HEX M6 X 1.0 G8 YEL CHR
(1)10	077992	17	NUT HEX LOCK M6-1.0 SS NY INS
(2)11	0F98350AL0R	1	ROOF C2
12	0F2786	2	SLITTER C4
13	0F2785	1	SPLITTER LOWER C4
14	0F3364	1	SPLITTER STINGER C2
15	0F4880	2	SUPPORT SPLITTER LH C2
16	0F5049B	2	PULL TAB DOOR LOCK SS
17	0F4487A	1	ASSEMBLY COVER ACCESS
18	022473	7	WASHER FLAT 1/4-M6 ZINC
19	022097	5	WASHER LOCK M6-1/4
20	022127	1	NUT HEX 1/4-20 STEEL
21	0F3072	10	INSULATION RETAINMENT HANGER
22	078115	26	WASHER SELF LOCKING DOME #4-40
23	0C8566	4	SCREW HHFC M6-1.0 X 20 G8.8
24	0G6001A	1	KIT INSULATION C2
24A	0G5892	2	INSULATION DOOR C2
24B	0L3103	1	KIT INSULATION C2
24BA	0G5892A	1	INSULATION ROOF TOP
24BB	0G5892F	1	INSULATION ROOF TOP
24C	0G5892C	2	INSULATION SPLITTER
24D	0G5892D	2	INSULATION SPLITTER
24E	0G5892E	1	INSULATION LOWER SPLITTER
25	0F5048D	2	VISE-ACTION LATCH SLOTTED CIR
26	0E5968	1	GASKET EXTRUDED TRIM (328" LG)
27	0H0412	4	NUT U M6-1.0 GEOMET
28	0H1208A	1	RF COVER PLATE-PLASTIC-BISQUE
	0H1208B	1	RF COVER PLATE-PLASTIC-GREY
29	0F4051C	2	INSULATION DUCT
30	0F3890B	4	RETAINER INSULATION (820)
31	0F4051B	2	INSULATION DUCT SIDES
32	0F3890	4	RETAINER INSULATION (450)
33	078115A	6	WASHER SELF LOCKING DOME #8-32
34	0E5298L	1	FOAM 300 X 300 THERMAL ACO
35	042568	2	SCREW HHC M6-1.0 X 20 G8.8
36	0912970090	2	ASSY WIRE 14AWG GRN/YEL
37	022447	2	WASHER SHAKEPROOF INT 1/4
38	0G9473	1	DEFLECTOR INTAKE 2.4L G2 TURBO
39	0F8869D	1	KEY VISE-ACTION LATCH SLOT CIR
40	052250	1	TAPE FOAM 1X1 (71.0"LG)
41	066760	1	STRIP SEALANT 1/8 X 1 (44.52"LG)

UNLESS OTHERWISE SPECIFIED:

(1) ENCLOSURE NOTE: PANELS THAT FASTEN TO THE BASEFRAME (EXCEPT ITEM 1) MUST BE SECURED USING I/N 2 & 5 (THREAD FORMING FASTENERS) AND I/N 10 (LOCK NUT). LOCK NUT IS TO BE INSTALLED AFTER THREAD FORMING FASTENER HAS PENETRATED THROUGH EXTRUSIONS IN ENCLOSURE PANELS. ALL PANEL TO PANEL CONNECTIONS TO INCLUDE AT LEAST ONE CONNECTION POINT USING I/N 5 (THREAD FORMING FASTENER).

(2) SHEET METAL PARTS LISTED IN THE BOM TABLE ARE REPRESENTING GENERIC PARTS (NO COLOR)

- MANUFACTURING: FOR CORRECT MATERIAL AND COLOR REFER TO AS400 BOM.
- CUSTOMER: WHEN ORDERING REPLACEMENT PARTS ENTER BASE NUMBER (FIRST 6 DIGITS ONLY) IN THE SYSTEM FOR CORRECT MATERIAL AND COLOR (FOR REFERENCE SEE GUIDELINE 0H7169).

GROUP F

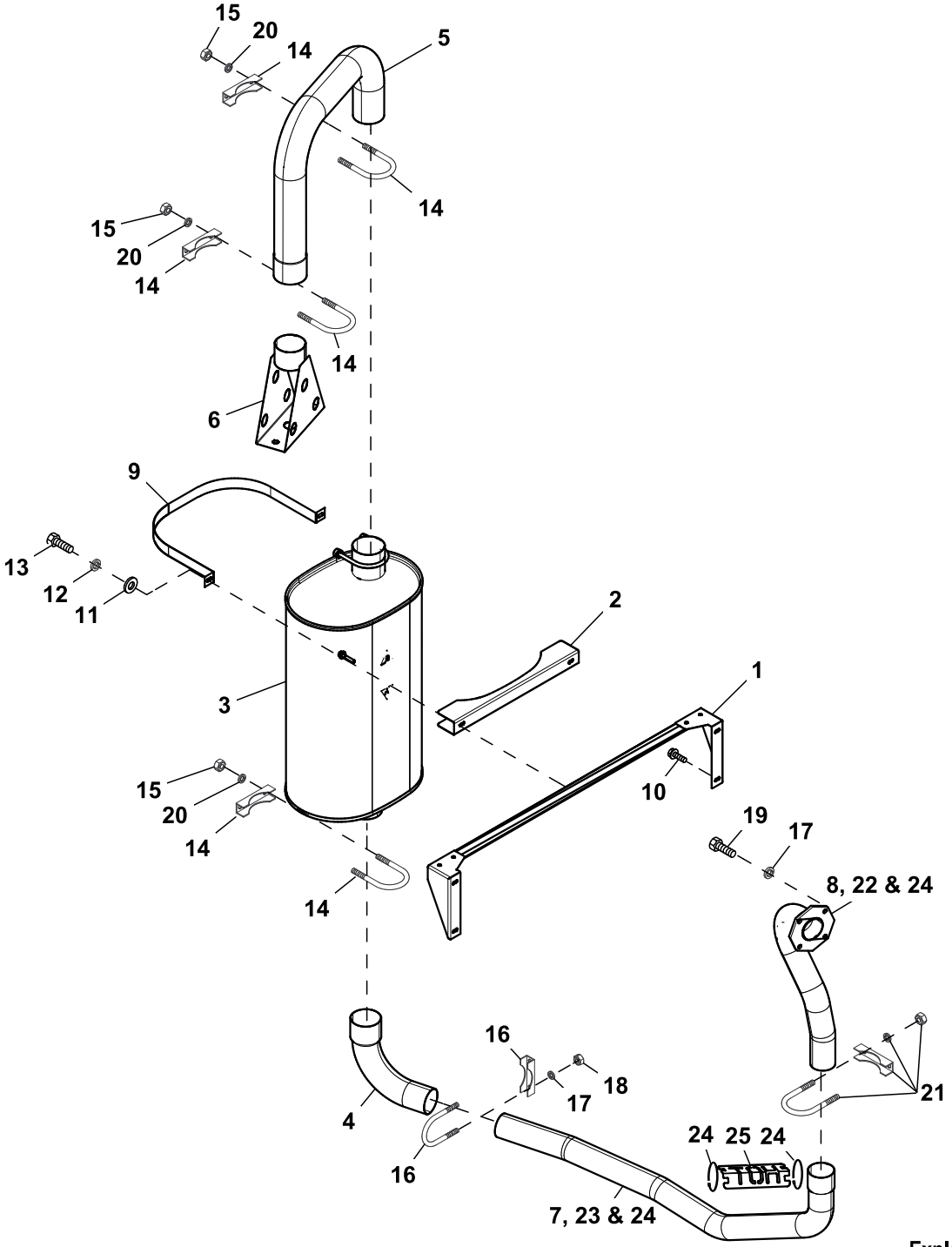

Revision: K-2044-E
Date: 3/5/15

Exploded View: MUFFLER EXH 2.4L G2 TURBO
Drawing No.: 0H3357

EXPLODED VIEW: EV MUFFLER EXH 2.4L G2 TURBO

DRAWING #: 0H3357

GROUP F

ITEM	PART#	QTY.	DESCRIPTION
(1)1	0G86870ST03	1	BRACKET MUFFLER
2	0G8686	1	BRACKET STIFFENER
3	0K7782	1	MFLR 8.5"X11.5"X19" 2.5"IN/OUT
4	0G0113	1	EXHAUST ELBOW
5	0F2808D	1	EXHAUST PIPE
6	0G0007	1	DIFFUSER EXHAUST WELDMENT
7	0H3371	1	PIPE EXHAUST 2.4L 60kW
8	0H3372	1	UPPER EXHAUST PIPE ASM
9	0G8685	1	STRAP MUFFLER
10	0C2454	4	SCREW THF M6-1 X 16 N WA Z/JS
11	022473	2	WASHER FLAT 1/4-M6 ZINC
12	022097	2	WASHER LOCK M6-1/4
13	049721	2	SCREW HHC M6-1.0 X 35 G8.8 BLK
14	080762	3	BOLT U 3/8-16 X 2.62
15	022241	6	NUT HEX 3/8-16 STEEL
16	036797	1	BOLT U 5/16-18 X 2.25
17	070006	6	WASHER LOCK M8 SS
18	022259	2	NUT HEX 5/16-18 STEEL
19	0A6928	4	SCREW HHC M8-1.25 X 20 SS
20	022237	6	WASHER LOCK 3/8
21	0H1310	1	BOLT U 3/8-16 X 2.30 W/SADDLE
(2)22	0F3794	1	EXHAUST BLANKET 600MM LONG (NOT SHOWN)
(2)23	0G3770	1	EXHAUST BLANKET 737MM (NOT SHOWN)
24	0K1526	5	TIE WRAP, 14.3" STAINLESS STL (NOT SHOWN)
25	0D3701A	1	PLATE HOT 50 X 110

NOTES (UNLESS OTHERWISE SPECIFIED):

(1) SHEET METAL PARTS LISTED IN THE BOM TABLE ARE REPRESENTING GENERIC PARTS (NO COLOR)

- MANUFACTURING: FOR CORRECT MATERIAL AND COLOR REFER TO XA BOM.
- CUSTOMER: WHEN ORDERING REPLACEMENT PARTS ENTER BASE NUMBER (FIRST 6 DIGITS ONLY) IN THE SYSTEM FOR CORRECT MATERIAL AND COLOR (FOR REFERENCE SEE GUIDELINE 0H7169).

(2) TWO TIE WRAPS ARE INCLUDED WITH EACH EXHAUST BLANKET, ONE AT EACH END.

GROUP G

NOTES:

1) MINIMUM RECOMMENDED CONCRETE PAD SIZE: 1155 (45 1/2") WIDE X 2255 (88 7/8") LONG. REFERENCE INSTALLATION GUIDE SUPPLIED WITH UNIT FOR CONCRETE PAD GUIDELINES.

2) ALLOW SUFFICIENT ROOM ON ALL SIDES OF THE GENERATOR FOR MAINTENANCE AND SERVICING. THIS UNIT MUST BE INSTALLED IN ACCORDANCE WITH CURRENT APPLICABLE NFPA 37 AND NFPA 70 STANDARDS AS WELL AS ANY OTHER FEDERAL, STATE AND LOCAL CODES FOR MINIMUM DISTANCES FROM OTHER STRUCTURES.

3) CIRCUIT BREAKER INFORMATION:
SEE SPECIFICATION SHEET WITHIN OWNERS MANUAL

4) INSIDE STUB-UP AREA FOR AC LOAD LEAD CONDUIT CONNECTION, NEUTRAL CONNECTION, BATTERY CHARGER 120 VOLT AC (0.5 AMP MAX.) CONNECTION, AND ACCESS TO TRANSFER SWITCH CONTROL WIRES. REMOVE FRONT COVER FOR ACCESS.

4A) FIELD CUT HOLE IS ONLY REQUIRED FOR MOUNTING OF GENERATOR ON AN EXISTING PAD.

5) REFERENCE OWNERS MANUAL FOR LIFTING WARNINGS.

6) REMOVE EITHER LEFT OR RIGHT HAND SIDE PANEL TO ACCESS EXHAUST MUFFLER AND FAN BELT.

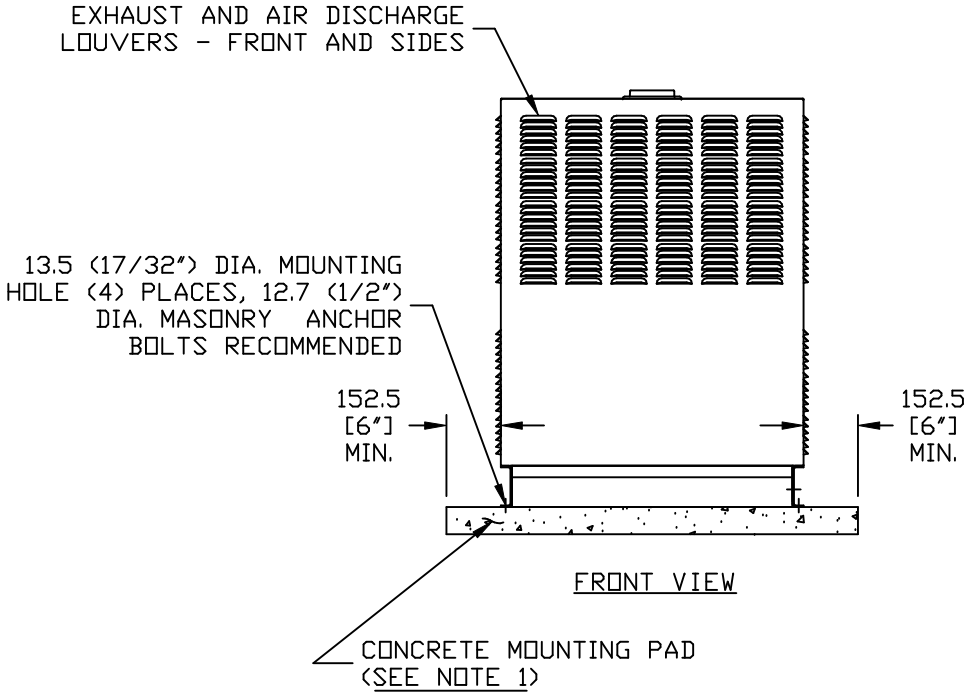

WEIGHT DATA			
ENCLOSURE MATERIAL	WEIGHT (GENSET ONLY) KG [LBS]	WEIGHT (WOODEN SHIPPING CRATE/SKID) KG [LBS]	SHIPPING WEIGHT (SKID AND GENSET) KG [LBS]
STEEL	654 [1441]	44 [98]	699 [1539]

EXPLODED VIEW:
INSTLTN DRAWING 2.4L 60 KW
DRAWING #: 0H0147

REVISION: H-6297-B
DATE: 3/31/10

GROUP G

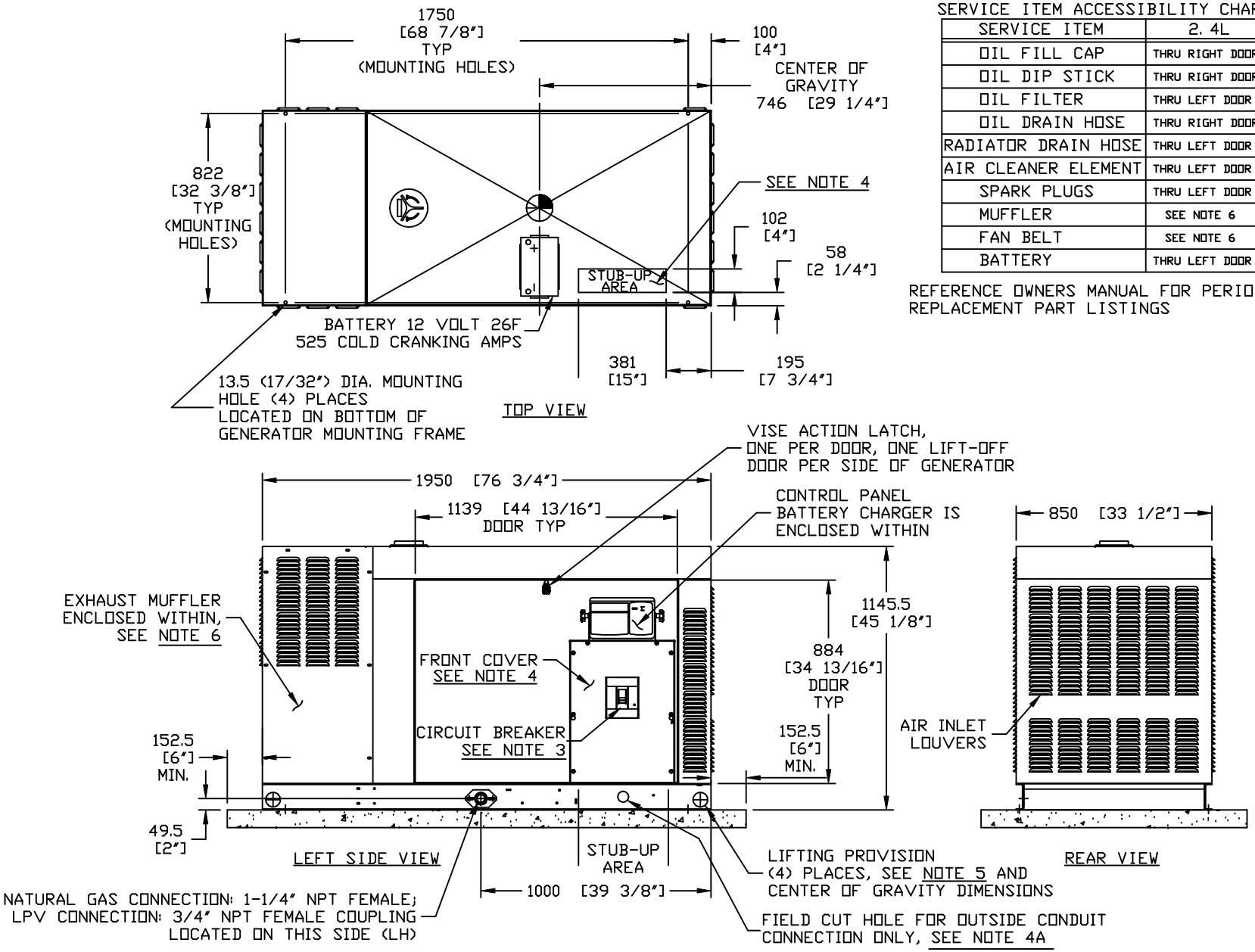

SERVICE ITEM ACCESSIBILITY CHART

SERVICE ITEM	2.4L
OIL FILL CAP	THRU RIGHT DOOR
OIL DIP STICK	THRU RIGHT DOOR
OIL FILTER	THRU LEFT DOOR
OIL DRAIN HOSE	THRU RIGHT DOOR
RADIATOR DRAIN HOSE	THRU LEFT DOOR
AIR CLEANER ELEMENT	THRU LEFT DOOR
SPARK PLUGS	THRU LEFT DOOR
MUFFLER	SEE NOTE 6
FAN BELT	SEE NOTE 6
BATTERY	THRU LEFT DOOR

REFERENCE OWNERS MANUAL FOR PERIODIC REPLACEMENT PART LISTINGS

EXPLODED VIEW:
INSTLTN DRAWING 2.4L 60 KW
DRAWING #: 0H0147

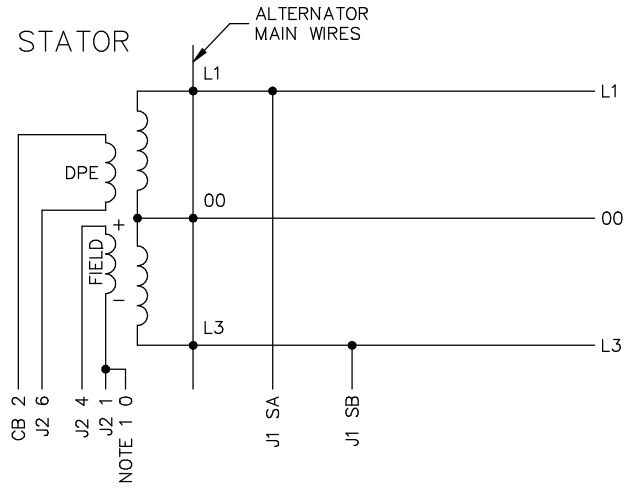

ALTERNATOR CONNECTIONS FOR 1ø UNITS

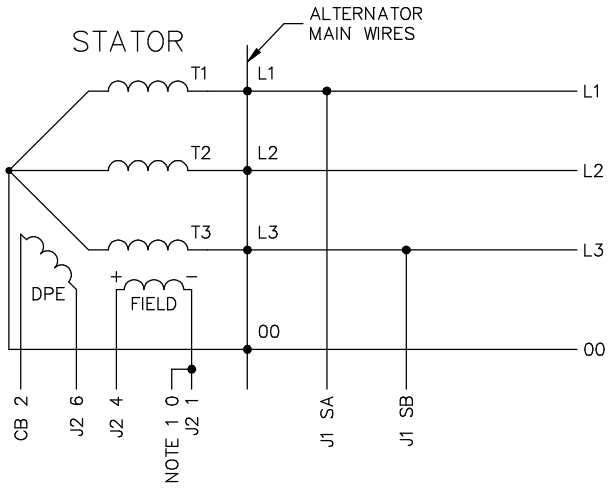

ALTERNATOR CONNECTIONS FOR 3ø UNITS

ALTERNATOR CONNECTION BOX

GENERATOR SET

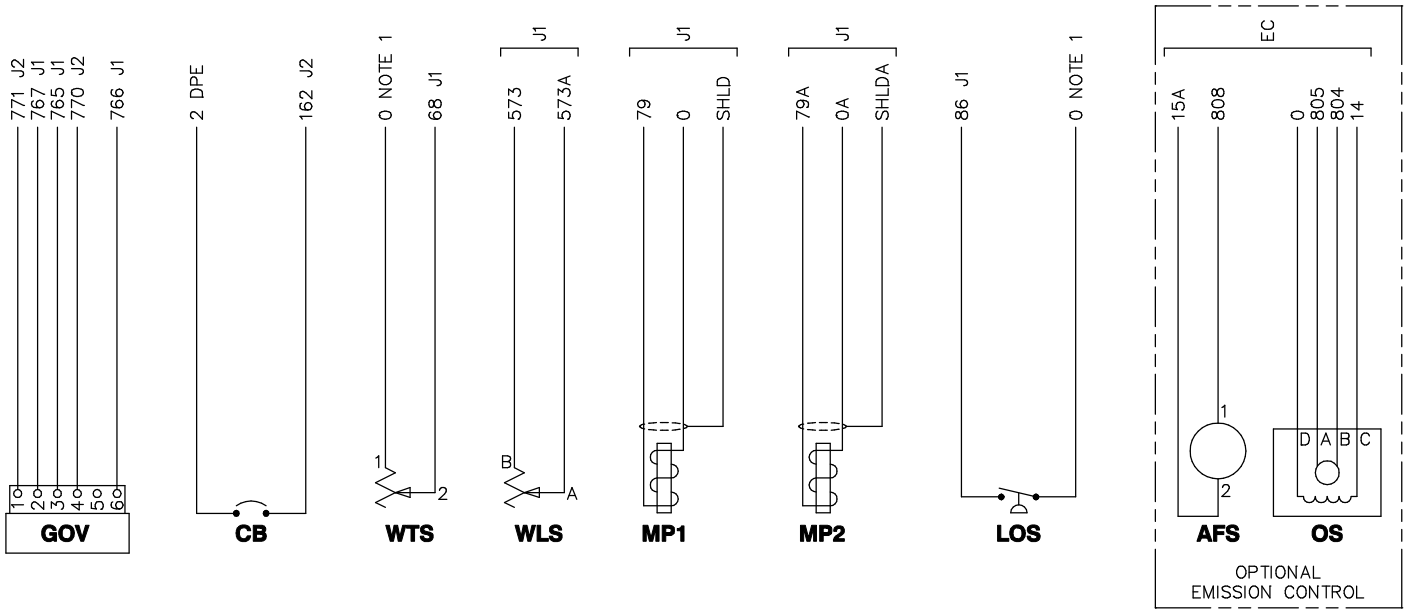

PAGE 1 OF 4

SCHEMATIC - DIAGRAM

G2.4L G2 NEXUS

REVISION: H-8455-D

DATE: 3/7/11

DRAWING #: 0H6340

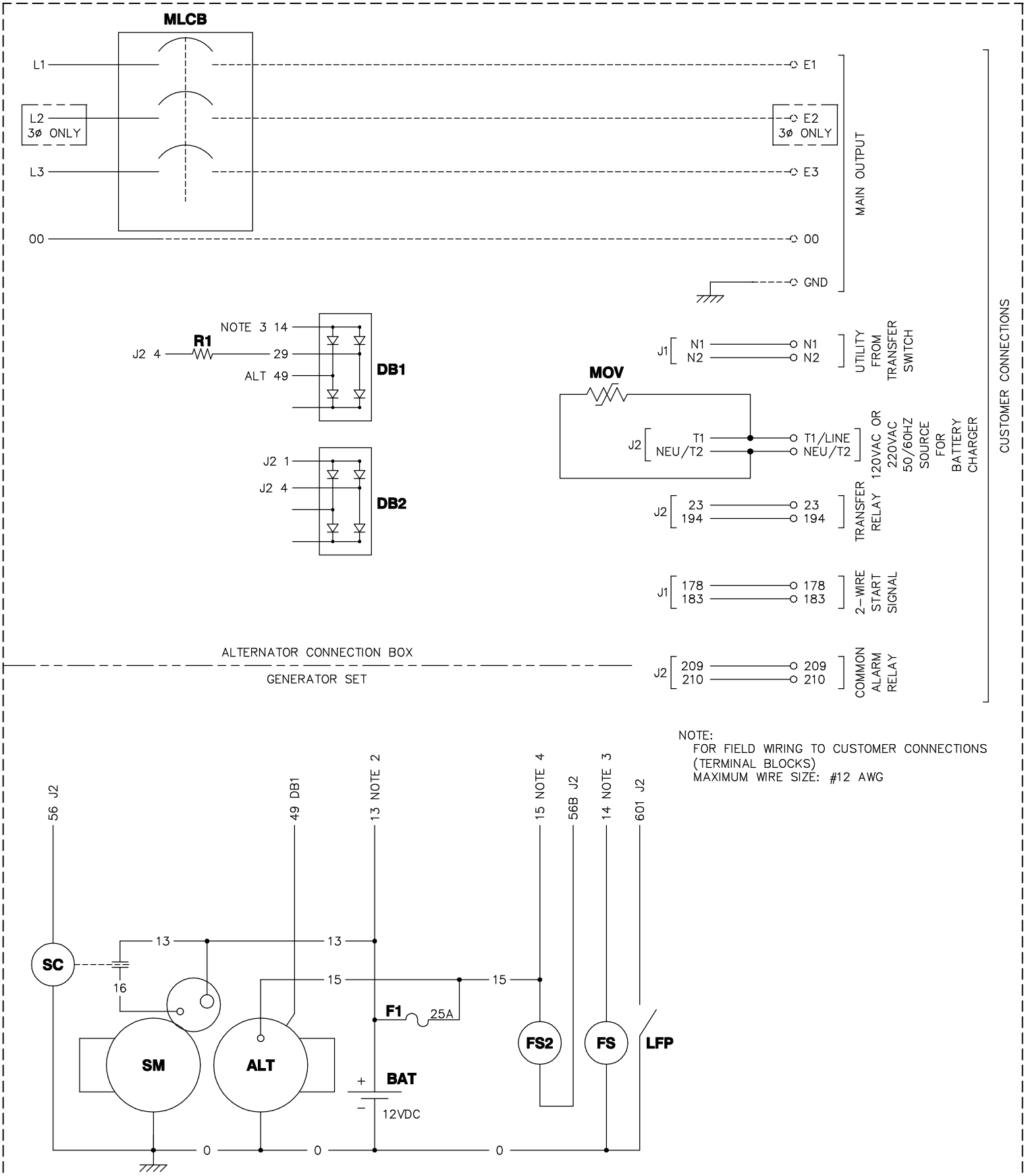

PAGE 2 OF 4

SCHEMATIC - DIAGRAM

G2.4L G2 NEXUS

DRAWING #: 0H6340

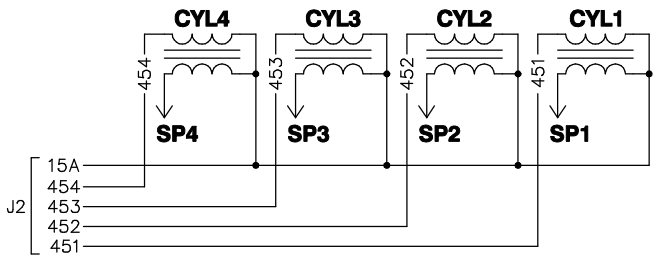

PAGE 3 OF 4

SCHEMATIC - DIAGRAM

REVISION: H-8455-D

G2.4L G2 NEXUS

DATE: 3/7/11

DRAWING #: 0H6340

NOTES:
1) WIRE #0 IS CHASSIS GROUND (BATTERY−) UNLESS NOTED OTHERWISE.
2) WIRE #13 IS UNFUSED +12VDC (BATTERY+).
3) WIRE #14 IS FUSED +12VDC WHEN GENERATOR IS CRANKING OR RUNNING.
4) WIRE #15 IS FUSED +12VDC FOR GENERAL USE.
5) WIRE #15A IS FUSED +12VDC FOR THE AIR/FUEL SOLENOID OPTION AND FOR THE IGNITION COILS.

BWR CONNECTOR

PIN	WIRE	TO	FUNCTION
1	820	J1−12	+5V POWER FOR BASIC REMOTE
2	817	J1−4	REMOTE DISPLAY SYSTEM READY
3	818	J1−5	REMOTE DISPLAY ALARM
4	819	J1−17	REMOTE DISPLAY MAINTENANCE
5	0	GND	NOTE 1

EC CONNECTOR

PIN	WIRE	TO	FUNCTION
1	0	GND	NOTE 1
2	14	J2−8	NOTE 3
3	15A	J2−23	NOTE 5
4	808	J2−2	AIR/FUEL RATIO SOLENOID DRIVER
5	805	J1−35	OXYGEN SENSOR RETURN
6	804	J1−34	OXYGEN SENSOR +

ENGINE CONTROL MODULE CONNECTIONS

J1

PIN	WIRE	TO	FUNCTION
1	178	CUST CON	REMOTE START RETURN
4	817	BWR−2	REMOTE DISPLAY SYSTEM READY
5	818	BWR−3	REMOTE DISPLAY ALARM
6	15	F1	NOTE 4
7	15	F1	NOTE 4
8	0	GND	NOTE 1
9	0	GND	NOTE 1
10	0	MP1−2	FLYWHEEL SENSOR −
11	0A	MP2−2	CAM SENSOR −
12	820	BWR−1	+5V POWER FOR BASIC REMOTE
13	SA	MLCB	OUTPUT VOLTAGE SENSING A
14	183	CUST CON	REMOTE START
15	SHLDA	MP2−1	CAM SENSOR DRAIN
16	SHLD	MP1−1	FLYWHEEL SENSOR DRAIN
17	819	BWR−4	REMOTE DISPLAY MAINTENANCE
18	767	GOV−2	THROTTLE POSITION FEEDBACK RETURN
19	765	GOV−3	THROTTLE POSITION FEEDBACK SOURCE
20	766	GOV−6	THROTTLE POSITION FEEDBACK SIGNAL
21	68	WTS−2	COOLANT TEMP SIGNAL
22	79A	MP2−3	CAM SENSOR +
23	79	MP1−3	FLYWHEEL SENSOR +
24	SB	MLCB	OUTPUT VOLTAGE SENSING B
25	N1	CUST CON	UTILITY VOLTAGE SENSING 1
26	N2	CUST CON	UTILITY VOLTAGE SENSING 2
31	573A	WLS−A	COOLANT LEVEL SIGNAL RETURN
32	573	WLS−B	COOLANT LEVEL SIGNAL
33	86	LOS−NC	LOW OIL PRESSURE SIGNAL
34	804	EC−6	OXYGEN SENSOR +
35	805	EC−5	OXYGEN SENSOR RETURN

J2

PIN	WIRE	TO	FUNCTION
1	770	GOV−4	THROTTLE DRIVE HI
2	808	EC−4	AIR/FUEL RATIO SOLENOID DRIVER
3	56B	FS2	STARTING FUEL SOLENOID CONTROL
4	451	CYL1	IGNITION COIL DRIVE 1
5	452	CYL2	IGNITION COIL DRIVE 2
6	453	CYL3	IGNITION COIL DRIVE 3
7	454	CYL4	IGNITION COIL DRIVE 4
8	14	DB1/FS/EC−2	NOTE 3
9	771	GOV−1	THROTTLE DRIVE LO
11	209	CAR	COMMON ALARM RELAY
12	23	CUST CON	TRANSFER RELAY COIL CONTROL
13	194	CUST CON	TRANSFER RELAY COIL +
14	601	LFP	LOW FUEL PRESSURE
15	210	CAR	COMMON ALARM RELAY
16	6	DPE	EXCITER RETURN
17	162	CB	EXCITER OUTPUT (BREAKER PROTECTED)
18	4	FIELD	FIELD (BRUSH) +
19	1	FIELD	FIELD (BRUSH) −
20	T1	CUST CON	120VAC SOURCE FOR BATTERY CHARGER
21	NEU	CUST CON	120VAC RETURN FOR BATTERY CHARGER
22	56	SC	STARTER CONTACTOR DRIVER
23	15A	EC−3/CYL1−CYL4	NOTE 5

LEGEND

00 − NEUTRAL
AFS − AIR/FUEL SOLENOID
ALT − DC CHARGE ALTERNATOR
BAT − BATTERY
BWR − BASIC WIRELESS RECEPTACLE
CAR − COMMON ALARM RELAY
CB − CIRCUIT BREAKER
CYL_ − CYLINDER IGNITION COIL
DB_ − DIODE BRIDGE
DPE − EXCITER
EC − EMISSIONS CONNECTOR
F1 − FUSE INLINE
FS_ − FUEL SOLENOID
GOV − ELECTRONIC GOVERNOR ACTUATOR
J_ − ENGINE CONTROL MODULE CONNECTOR
LFP − LOW FUEL PRESSURE SWITCH
LOS − LOW OIL PRESSURE SWITCH
MLCB − MAIN LINE CIRCUIT BREAKER
MOV − METAL OXIDE VARISTOR
MP_ − MAGNETIC PICKUP
OS − OXYGEN SENDER
R1 − RESISTOR
SC − STARTER CONTACTOR
SHLD − SHIELD
SM − STARTER MOTOR
SP_ − SPARK PLUG
WLS − COOLANT LEVEL SENDER
WTS − COOLANT TEMPERATURE SENDER

LEGEND

AFS	– AIR/FUEL SOLENOID	HVR	– HIGH VOLTAGE RECEPTACLE 12–PIN
ALT	– DC CHARGE ALTERNATOR	J1	– ENGINE CONTROL MODULE 35–PIN CONNECTOR
AS	– ALTERNATOR STATOR	J2	– ENGINE CONTROL MODULE 23–PIN CONNECTOR
BA	– BRUSH ASSEMBLY	LFP	– LOW FUEL PRESSURE SWITCH
BAT	– BATTERY	LOS	– LOW OIL PRESSURE SWITCH
BWR	– BASIC WIRELESS RECEPTACLE	LVP	– LOW VOLTAGE PLUG 8–PIN (BULKHEAD)
CAR	– COMMON ALARM RELAY	LVR	– LOW VOLTAGE RECEPTACLE 8–PIN
CB	– CIRCUIT BREAKER	MLCB	– MAIN LINE CIRCUIT BREAKER
CYL_	– CYLINDER IGNITION COIL	MOV	– METAL OXIDE VARISTOR
DB_	– DIODE BRIDGE	MP_	– MAGNETIC PICKUP
EC	– EMISSIONS CONNECTOR	NB	– NEUTRAL BLOCK
F1	– FUSE INLINE (25A ATO)	OS	– OXYGEN SENDER
FS_	– FUEL SOLENOID	R1	– RESISTOR
FSP	– FUEL SOLENOID PLUG	SC	– STARTER CONTACTOR
FSR	– FUEL SOLENOID RECEPTACLE	SM	– STARTER MOTOR
GND	– GROUND CONNECTION	TB_	– TERMINAL BLOCK, CAGE CLAMP
GOV	– ELECTRONIC GOVERNOR ACTUATOR	WLS	– COOLANT LEVEL SENDER
HVP	– HIGH VOLTAGE PLUG 12–PIN (BULKHEAD)	WTS	– COOLANT TEMPERATURE SENDER

NOTE: ALL WIRES 18 AWG 300V UL LISTED UNLESS SHOWN OTHERWISE

12 — AWG SIZE

3 — SPLICE NUMBER

WIRE SPLICE

NOTE: ALL WIRES ON THIS PAGE ARE 600V RATED

COMPONENTS LOCATED IN CUSTOMER CONNECTION BOX

60HZ UNITS

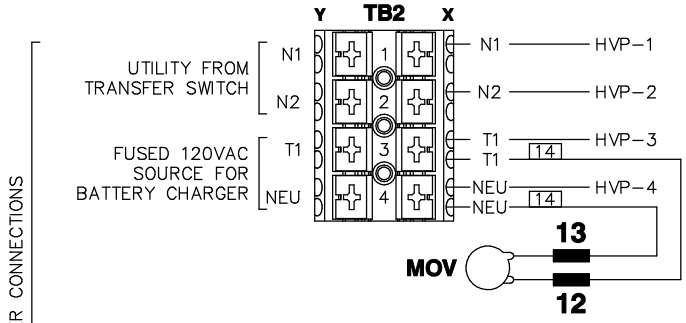

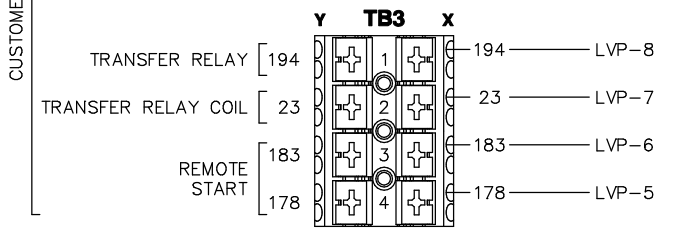

50HZ (M-VOLTAGE, 220VAC)

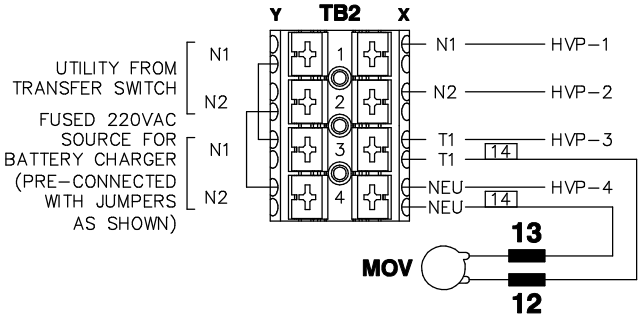

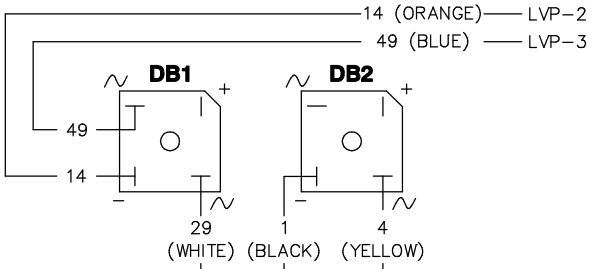

NOTE:
FOR FIELD WIRING TO CUSTOMER CONNECTIONS (TERMINAL BLOCKS)
MAXIMUM WIRE SIZE: #12 AWG

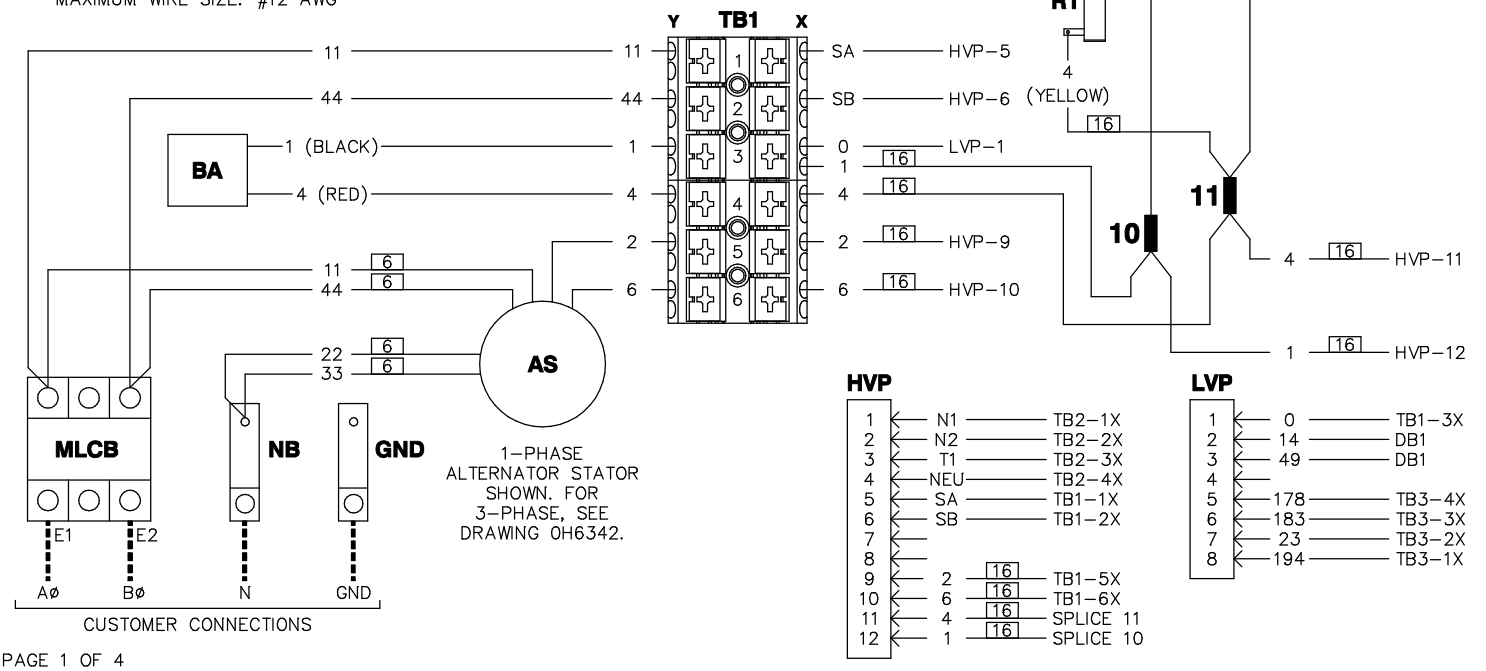

PAGE 1 OF 4

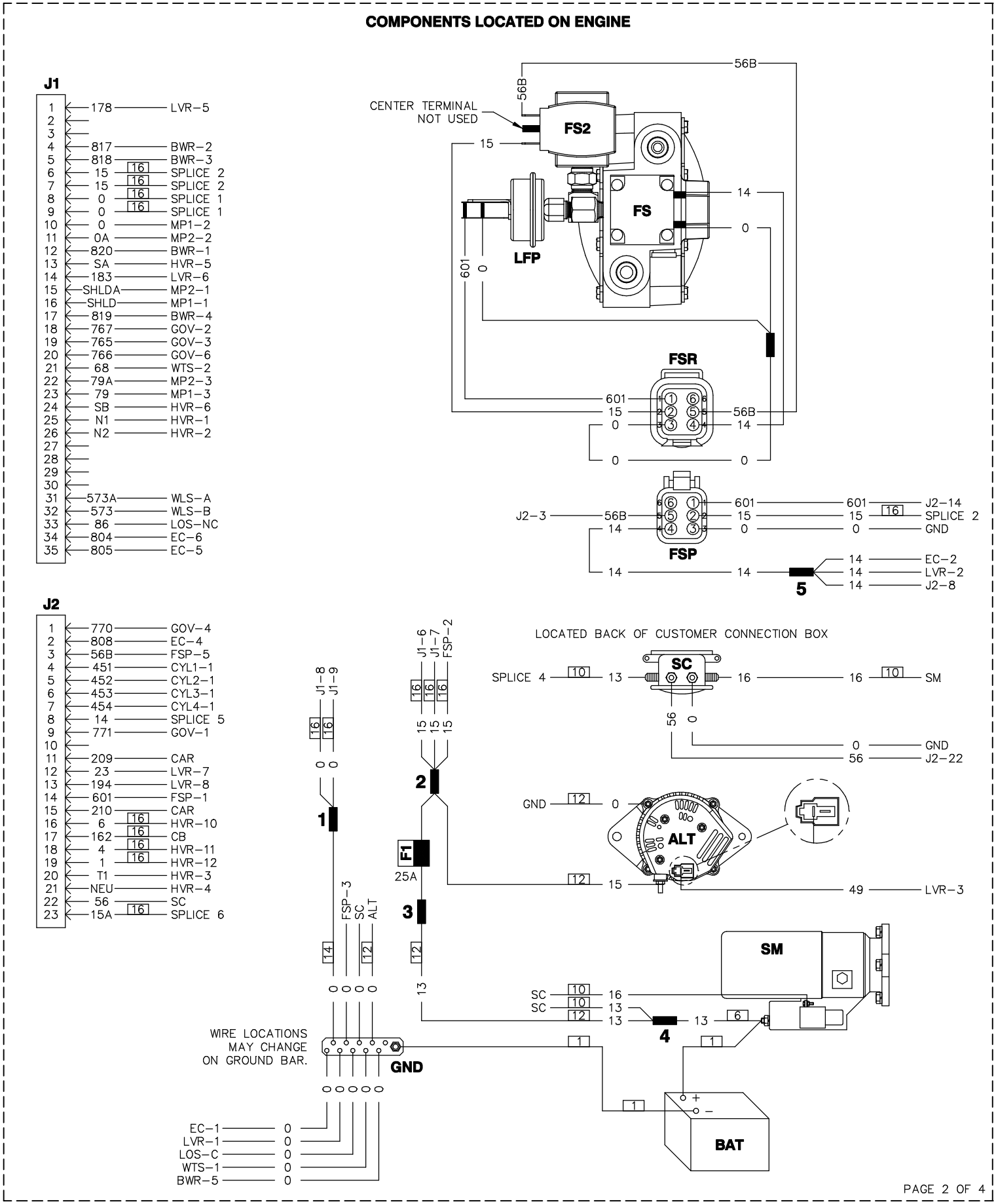
COMPONENTS LOCATED ON ENGINE
J1
1 178 LVR-5
2
3
4 817 BWR-2
5 818 BWR-3
6 15 16 SPLICE 2
7 15 16 SPLICE 2
8 0 16 SPLICE 1
9 0 16 SPLICE 1
10 0 MP1-2
11 0A MP2-2
12 820 BWR-1
13 SA HVR-5
14 183 LVR-6
15 SHLDA MP2-1
16 SHLD MP1-1
17 819 BWR-4
18 767 GOV-2
19 765 GOV-3
20 766 GOV-6
21 68 WTS-2
22 79A MP2-3
23 79 MP1-3
24 SB HVR-6
25 N1 HVR-1
26 N2 HVR-2
27
28
29
30
31 573A WLS-A
32 573 WLS-B
33 86 LOS-NC
34 804 EC-6
35 805 EC-5
CENTER TERMINAL NOT USED
FS2
FS
LFP
FSR
FSP
601
15
0
56B
14
J2-3
J2-14
SPLICE 2
GND
EC-2
LVR-2
J2-8
5
J2
1 770 GOV-4
2 808 EC-4
3 56B FSP-5
4 451 CYL1-1
5 452 CYL2-1
6 453 CYL3-1
7 454 CYL4-1
8 14 SPLICE 5
9 771 GOV-1
10
11 209 CAR
12 23 LVR-7
13 194 LVR-8
14 601 FSP-1
15 210 CAR
16 6 16 HVR-10
17 162 16 CB
18 4 16 HVR-11
19 1 16 HVR-12
20 T1 HVR-3
21 NEU HVR-4
22 56 SC
23 15A 16 SPLICE 6
J1-8
J1-9
J1-6
J1-7
FSP-2
1
2
3
4
F1
25A
FSP-3
SC
ALT
LOCATED BACK OF CUSTOMER CONNECTION BOX
SPLICE 4
SC
SM
GND
J2-22
ALT
LVR-3
SM
WIRE LOCATIONS MAY CHANGE ON GROUND BAR.
GND
BAT
EC-1
LVR-1
LOS-C
WTS-1
BWR-5
PAGE 2 OF 4

COMPONENTS LOCATED ON ENGINE

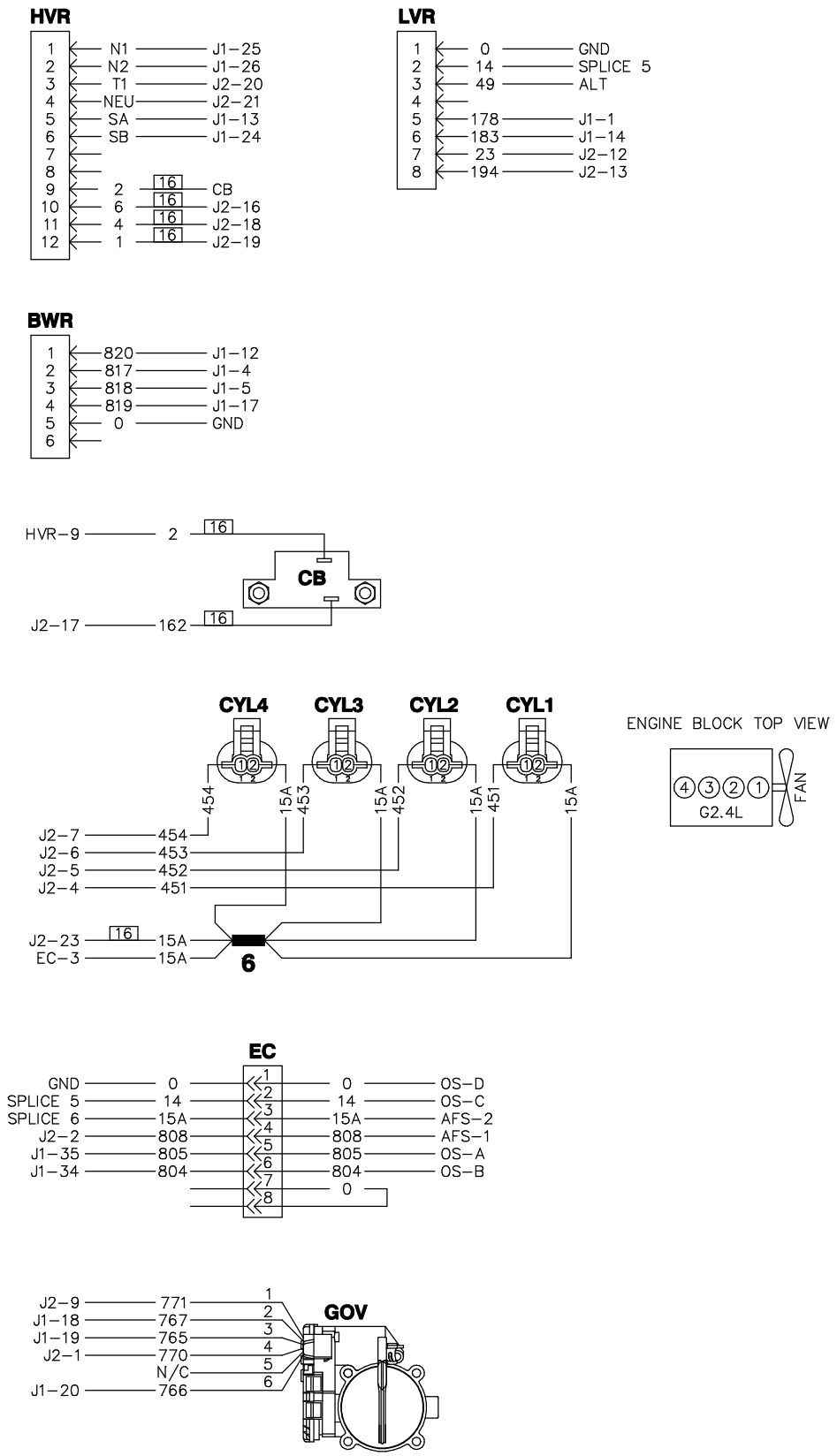

PAGE 3 OF 4

COMPONENTS LOCATED ON ENGINE

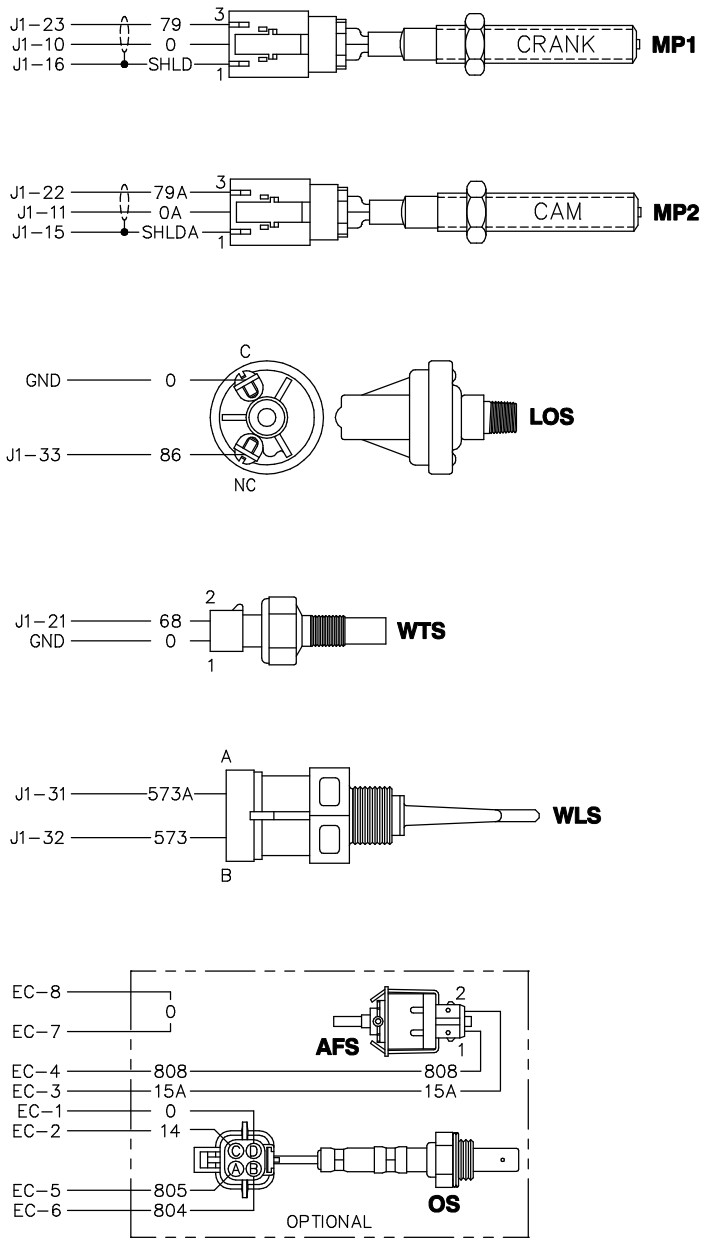

WIRING - DIAGRAM

G2.4L G2 NEXUS

DRAWING #: 0H6341

OPTION 1 - SINGLE PHASE, CPL CONTROL PANEL

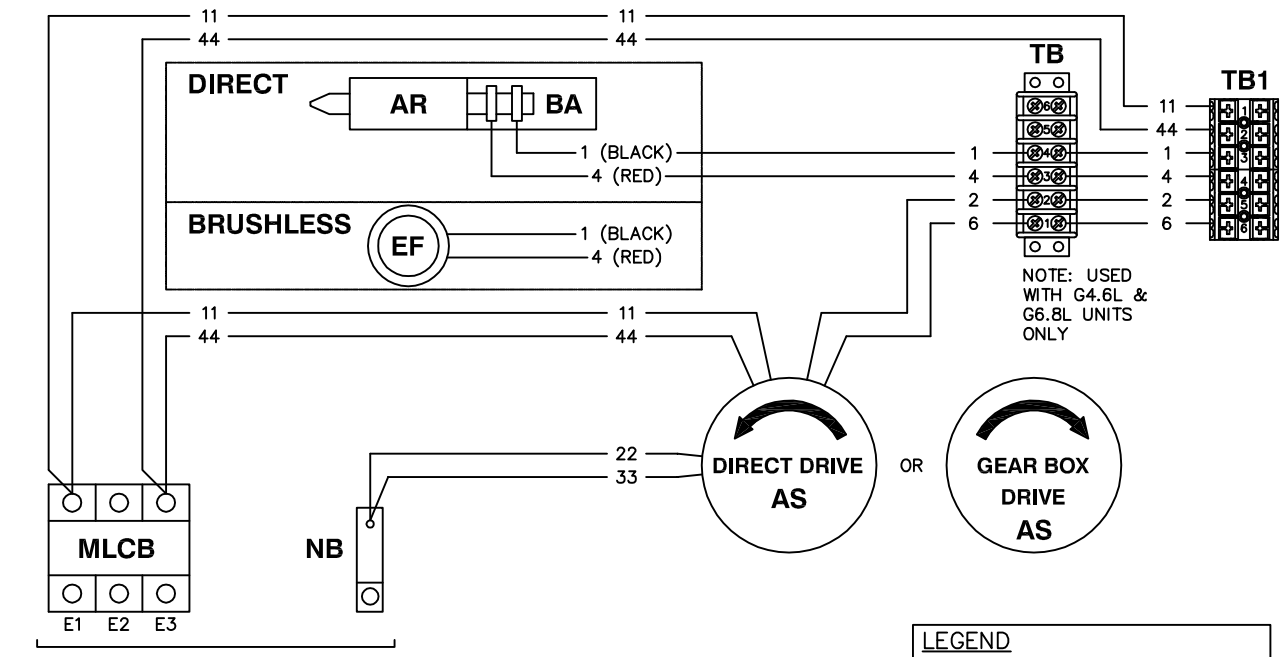

GENERATOR OUTPUT CUSTOMER CONNECTIONS
E1 TO E2] *240VAC OR 220VAC
E1 TO NB] *120VAC OR 110VAC
E2 TO NB]
*NOTE: THE 8TH DIGIT OF THE MODEL NUMBER SPECIFIES OUTPUT VOLTAGE
"A" = 120/240VAC 60HZ
"M" = 110/220VAC 50HZ

LEGEND
AR – ALTERNATOR ROTOR
AS – ALTERNATOR STATOR
BA – BRUSH ASSEMBLY
EF – EXCITER FIELD
MLCB – MAIN LINE CIRCUIT BREAKER
NB – NEUTRAL BLOCK
TB_ – TERMINAL BLOCK

OPTION 2 - THREE PHASE, CPL CONTROL PANEL,120/208V

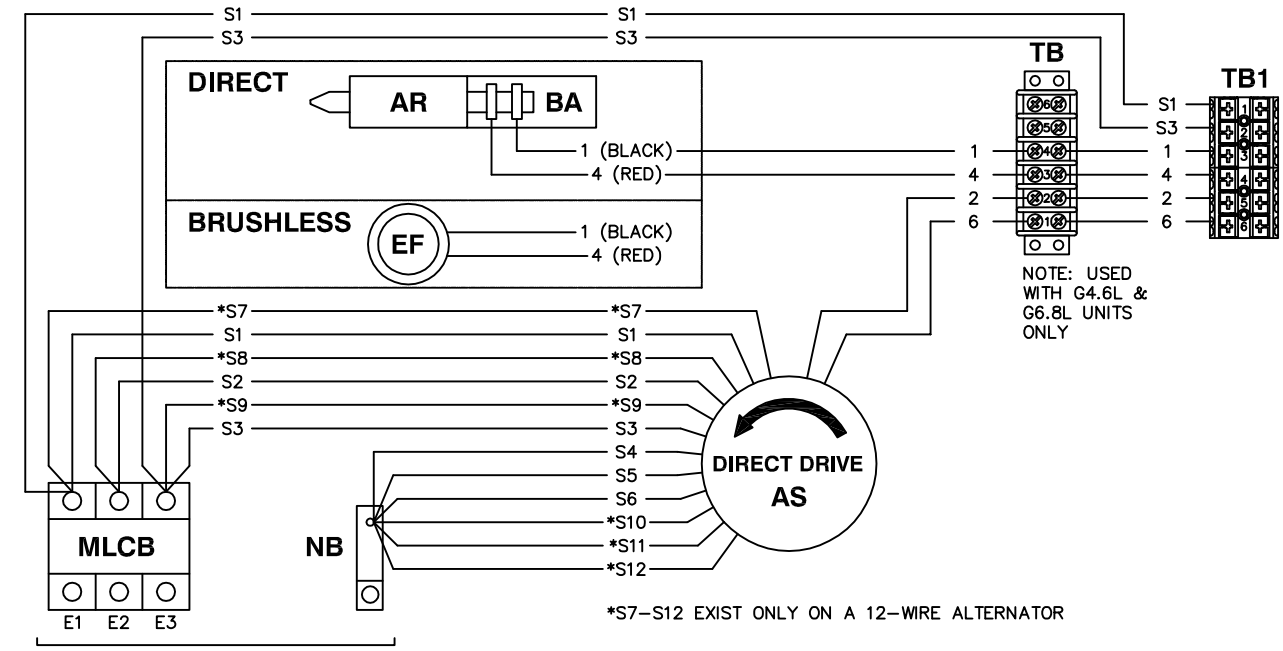

*S7–S12 EXIST ONLY ON A 12–WIRE ALTERNATOR

GENERATOR OUTPUT CUSTOMER CONNECTIONS
E1 TO E2]
E2 TO E3] *208VAC
E1 TO E3]
E1, E2 OR E3 TO NB = *120VAC
*NOTE: THE 8TH DIGIT OF THE MODEL NUMBER SPECIFIES OUTPUT VOLTAGE
"G" = 120/208VAC 60HZ

PAGE 1 OF 4

WIRING - DIAGRAM
CPL ALTERNATOR
DRAWING #: 0H6342

REVISION: K-3026-E
DATE: 6/8/15

OPTION 3 - THREE PHASE, CPL CONTROL PANEL, 6-WIRE 277/480V

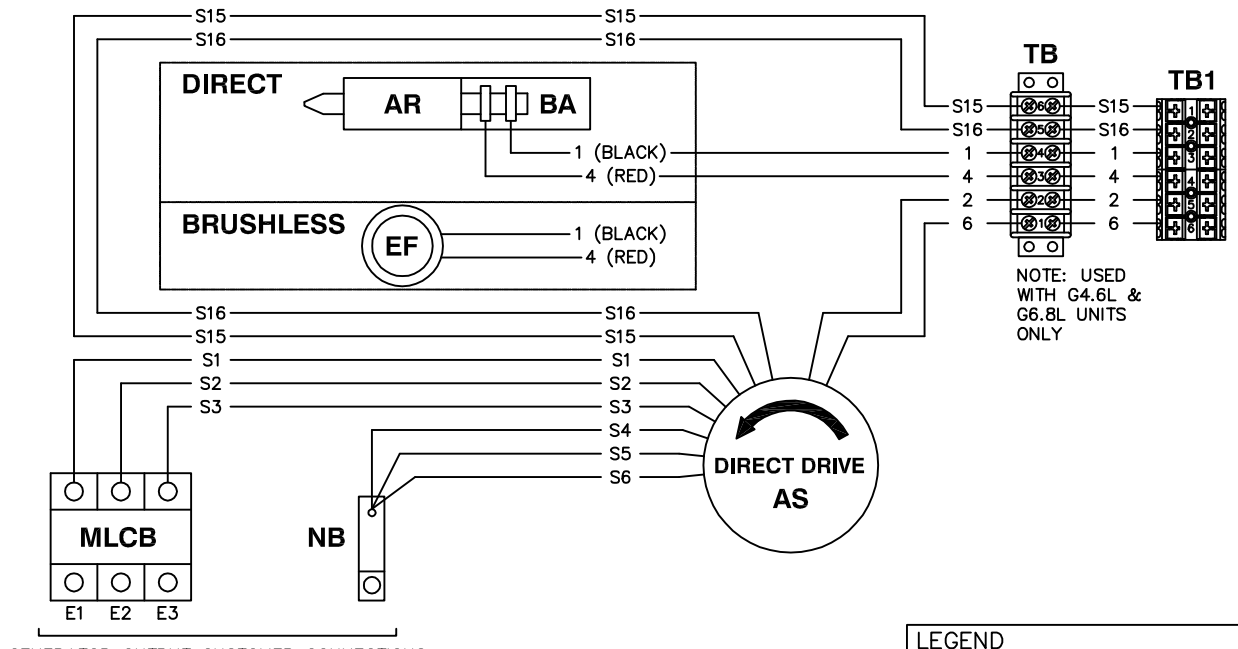

GENERATOR OUTPUT CUSTOMER CONNECTIONS
E1 TO E2
E2 TO E3 *480VAC OR *400VAC
E1 TO E3
E1, E2 OR E3 TO NB = *277VAC OR *231VAC
*NOTE: THE 8TH DIGIT OF THE MODEL NUMBER SPECIFIES OUTPUT VOLTAGE
"K" = 277/480VAC 60HZ
"R" = 231/400VAC 50HZ

LEGEND
AR – ALTERNATOR ROTOR
AS – ALTERNATOR STATOR
BA – BRUSH ASSEMBLY
EF – EXCITER FIELD
MLCB – MAIN LINE CIRCUIT BREAKER
NB – NEUTRAL BLOCK
TB_ – TERMINAL BLOCK

OPTION 4 - THREE PHASE DELTA, CPL CONTROL PANEL, 7-WIRE 120/240V

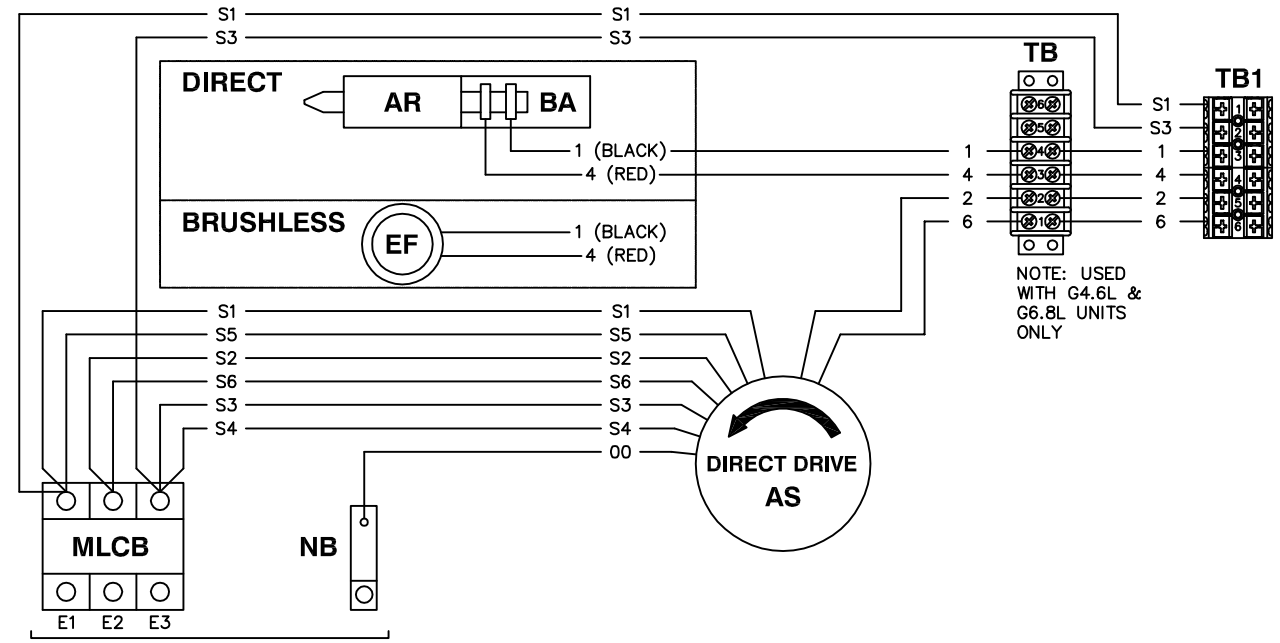

GENERATOR OUTPUT CUSTOMER CONNECTIONS
E1 TO E2
E2 TO E3 *240VAC
E1 TO E3
E3–NB = *208VAC
E1 OR E3 TO NB = *120VAC
*NOTE: THE 8TH DIGIT OF THE MODEL NUMBER SPECIFIES OUTPUT VOLTAGE
"J" = 120/240VAC 60HZ

WIRING - DIAGRAM
CPL ALTERNATOR
DRAWING #: 0H6342

REVISION: K-3026-E
DATE: 6/8/15

OPTION 5 - THREE PHASE, CPL CONTROL PANEL, GEARBOX (REVERSE ROTATION)

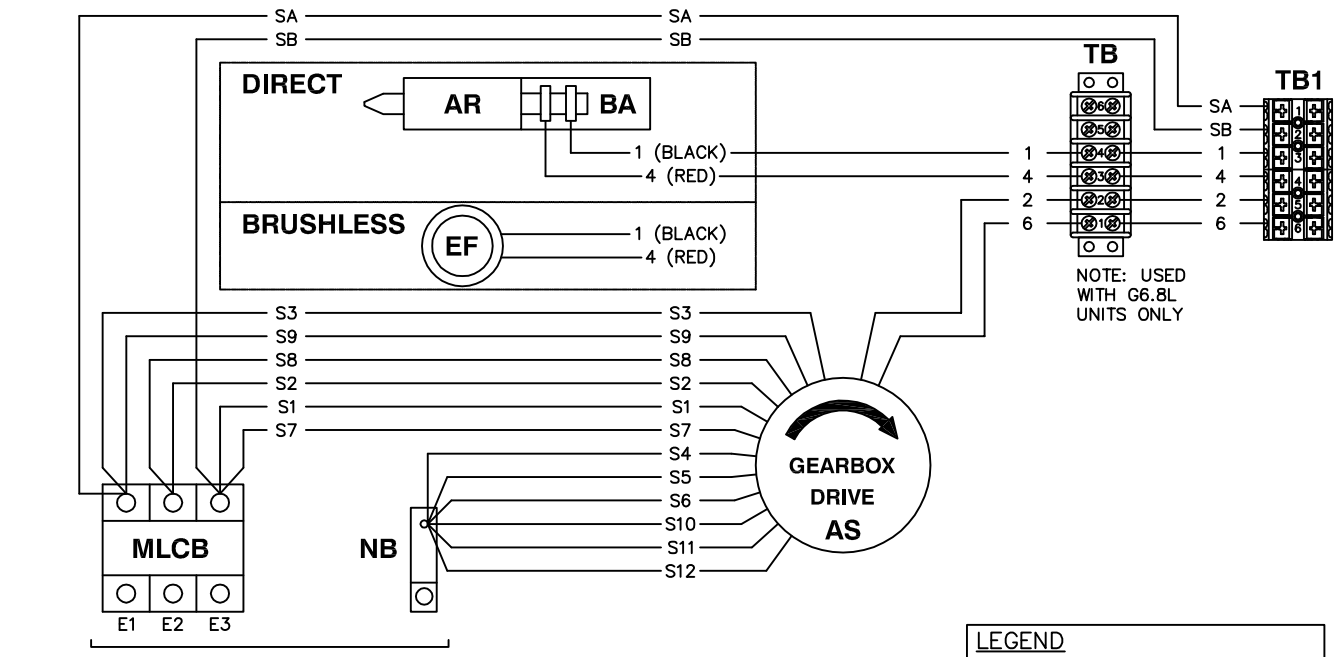

GENERATOR OUTPUT CUSTOMER CONNECTIONS
E1 TO E2
E2 TO E3 *208VAC
E1 TO E3
E1, E2 OR E3 TO NB = *120VAC
*NOTE: THE 8TH DIGIT OF THE MODEL NUMBER SPECIFIES OUTPUT VOLTAGE
"G" = 120/208VAC 60HZ

LEGEND
AR – ALTERNATOR ROTOR
AS – ALTERNATOR STATOR
BA – BRUSH ASSEMBLY
EF – EXCITER FIELD
MLCB – MAIN LINE CIRCUIT BREAKER
NB – NEUTRAL BLOCK
TB_ – TERMINAL BLOCK

OPTION 6 - THREE PHASE, CPL CONTROL PANEL, GEARBOX (REVERSE ROTATION)

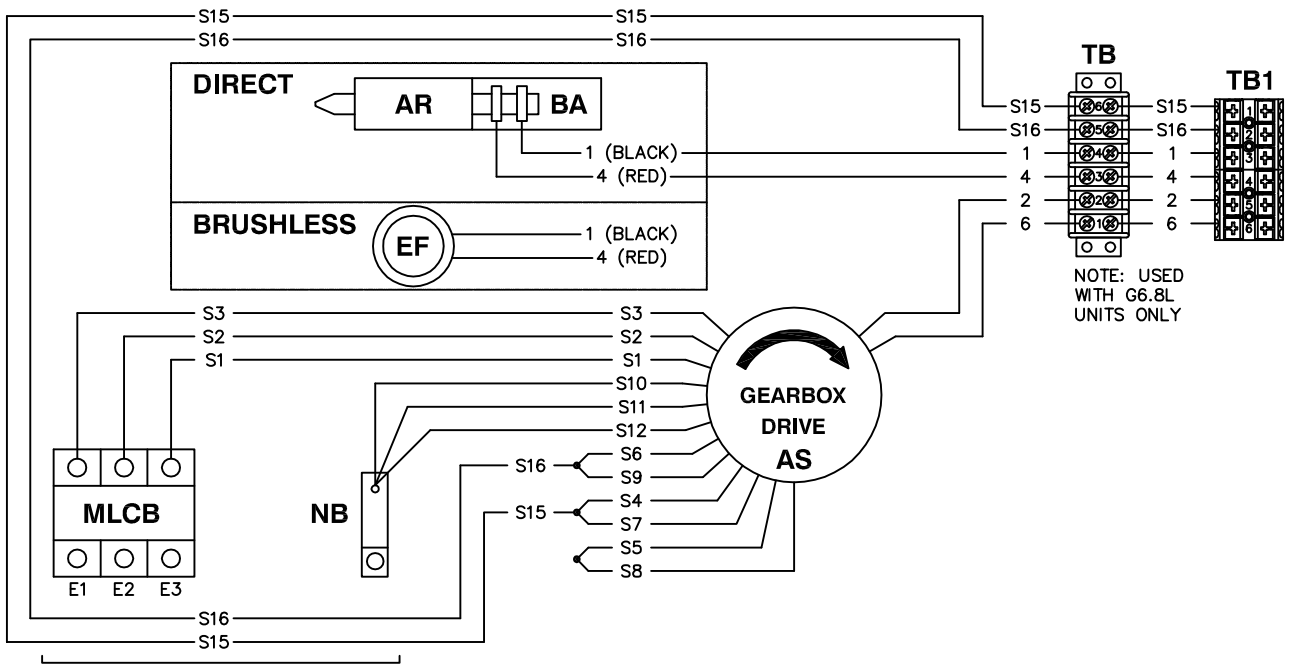

GENERATOR OUTPUT CUSTOMER CONNECTIONS
E1 TO E2
E2 TO E3 *480VAC
E1 TO E3
E1, E2 OR E3 TO NB = *277VAC
*NOTE: THE 8TH DIGIT OF THE MODEL NUMBER SPECIFIES OUTPUT VOLTAGE
"K" = 277/480VAC 60HZ

WIRING - DIAGRAM
CPL ALTERNATOR
DRAWING #: 0H6342

REVISION: K-3026-E
DATE: 6/8/15

OPTION 7 - THREE PHASE SERIES DELTA, CPL CONTROL PANEL, GEARBOX (REVERSE ROTATION)

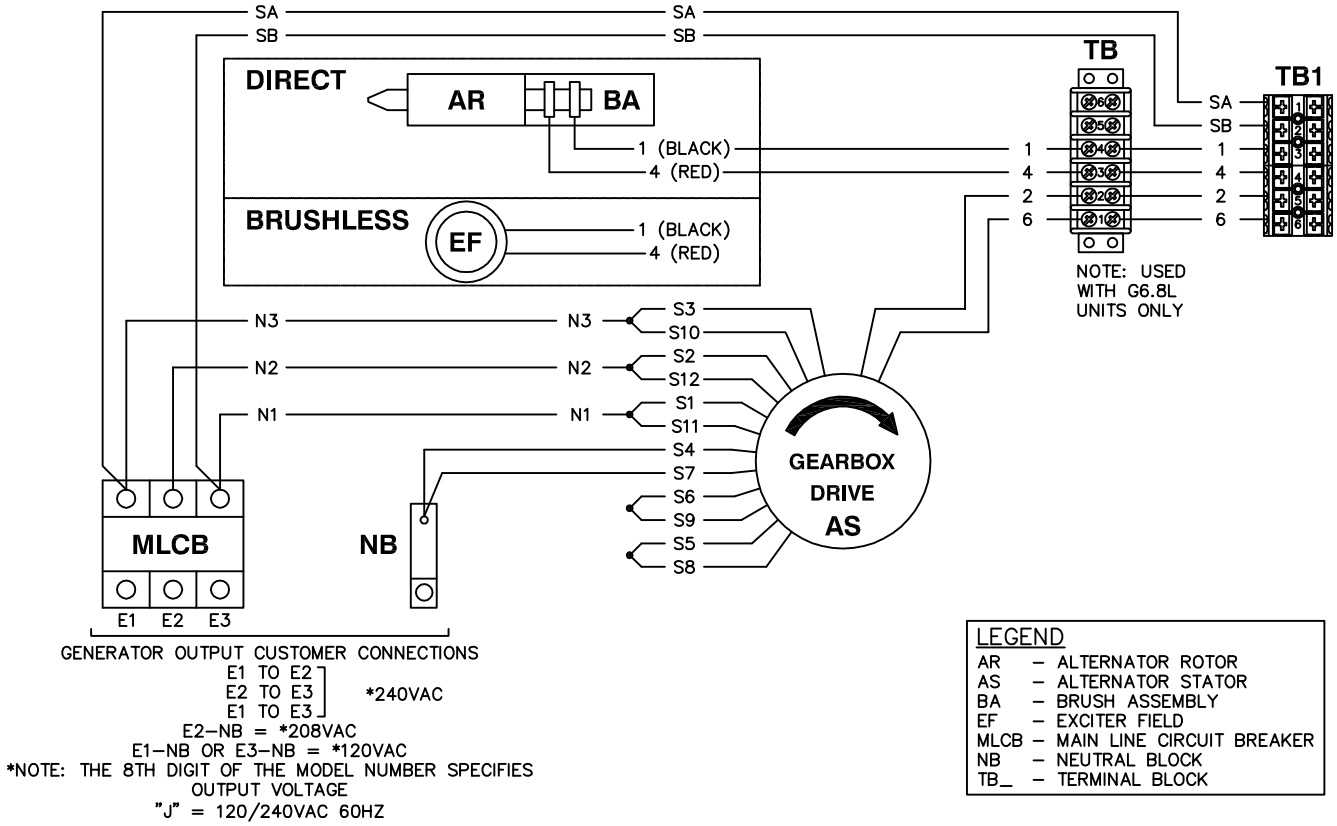

WIRING - DIAGRAM
CPL ALTERNATOR
DRAWING #: 0H6342

REVISION: K-3026-E
DATE: 6/8/15

OPTION 1 - SINGLE PHASE, CPL CONTROL PANEL

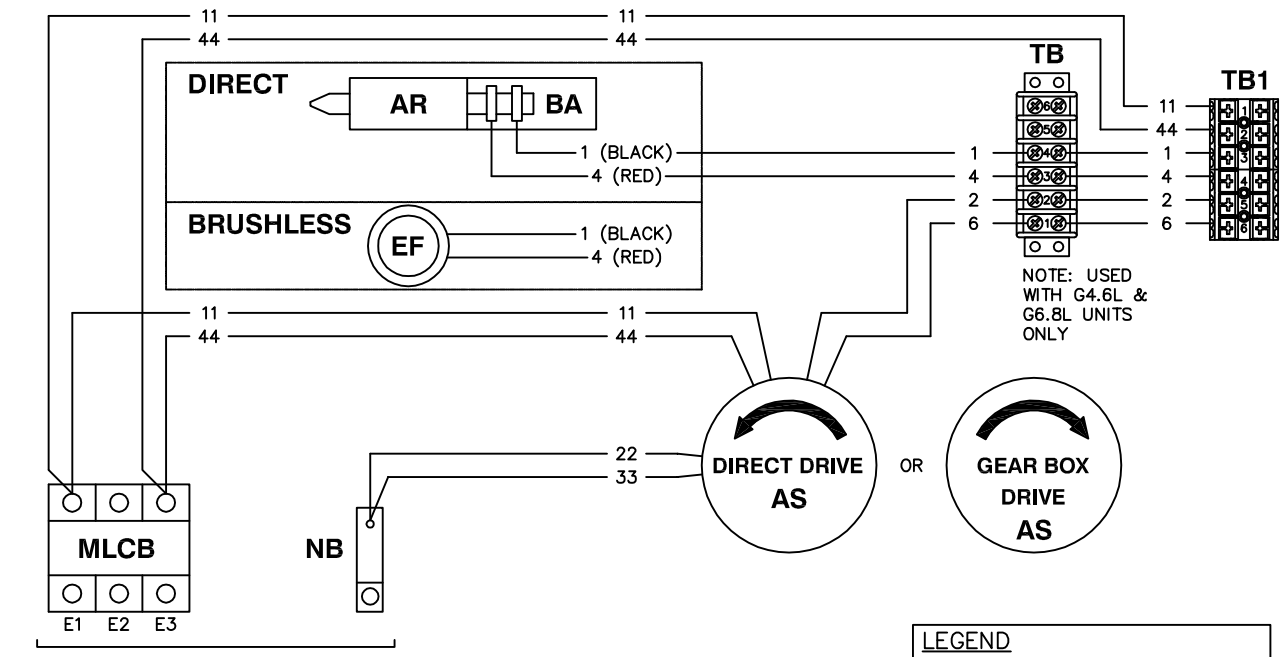

GENERATOR OUTPUT CUSTOMER CONNECTIONS
E1 TO E2] *240VAC OR 220VAC
E1 TO NB] *120VAC OR 110VAC
E2 TO NB]
*NOTE: THE 8TH DIGIT OF THE MODEL NUMBER SPECIFIES OUTPUT VOLTAGE
"A" = 120/240VAC 60HZ
"M" = 110/220VAC 50HZ

LEGEND
AR – ALTERNATOR ROTOR
AS – ALTERNATOR STATOR
BA – BRUSH ASSEMBLY
EF – EXCITER FIELD
MLCB – MAIN LINE CIRCUIT BREAKER
NB – NEUTRAL BLOCK
TB_ – TERMINAL BLOCK

OPTION 2 - THREE PHASE, CPL CONTROL PANEL,120/208V

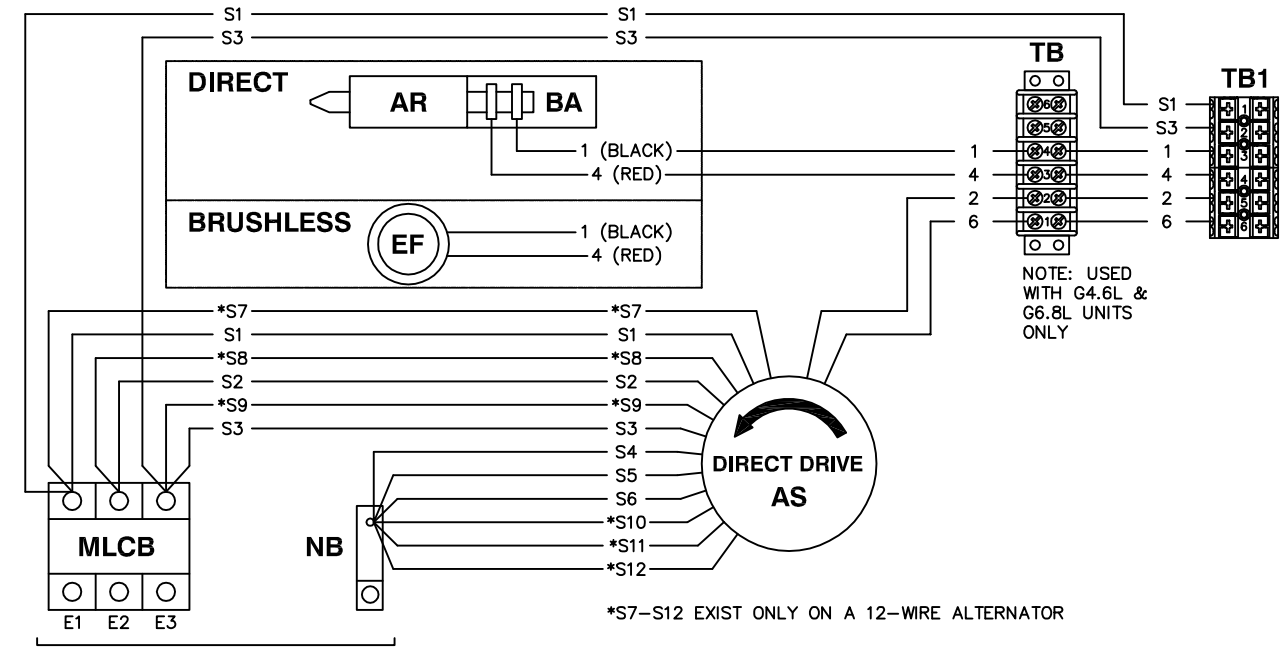

*S7–S12 EXIST ONLY ON A 12–WIRE ALTERNATOR

GENERATOR OUTPUT CUSTOMER CONNECTIONS
E1 TO E2]
E2 TO E3] *208VAC
E1 TO E3]
E1, E2 OR E3 TO NB = *120VAC
*NOTE: THE 8TH DIGIT OF THE MODEL NUMBER SPECIFIES OUTPUT VOLTAGE
"G" = 120/208VAC 60HZ

PAGE 1 OF 4

WIRING - DIAGRAM
CPL ALTERNATOR
DRAWING #: 0H6342

REVISION: K-3026-E
DATE: 6/8/15

OPTION 3 - THREE PHASE, CPL CONTROL PANEL, 6-WIRE 277/480V

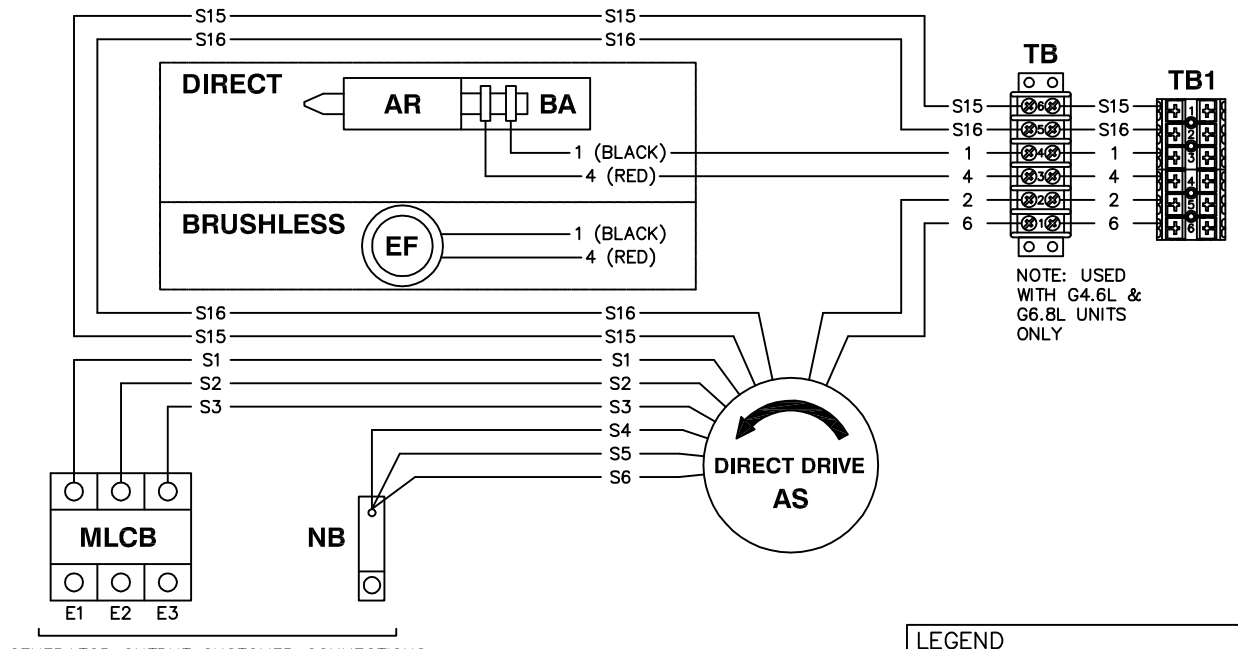

GENERATOR OUTPUT CUSTOMER CONNECTIONS
E1 TO E2
E2 TO E3 *480VAC OR *400VAC
E1 TO E3
E1, E2 OR E3 TO NB = *277VAC OR *231VAC
*NOTE: THE 8TH DIGIT OF THE MODEL NUMBER SPECIFIES OUTPUT VOLTAGE
"K" = 277/480VAC 60HZ
"R" = 231/400VAC 50HZ

LEGEND
AR – ALTERNATOR ROTOR
AS – ALTERNATOR STATOR
BA – BRUSH ASSEMBLY
EF – EXCITER FIELD
MLCB – MAIN LINE CIRCUIT BREAKER
NB – NEUTRAL BLOCK
TB_ – TERMINAL BLOCK

OPTION 4 - THREE PHASE DELTA, CPL CONTROL PANEL, 7-WIRE 120/240V

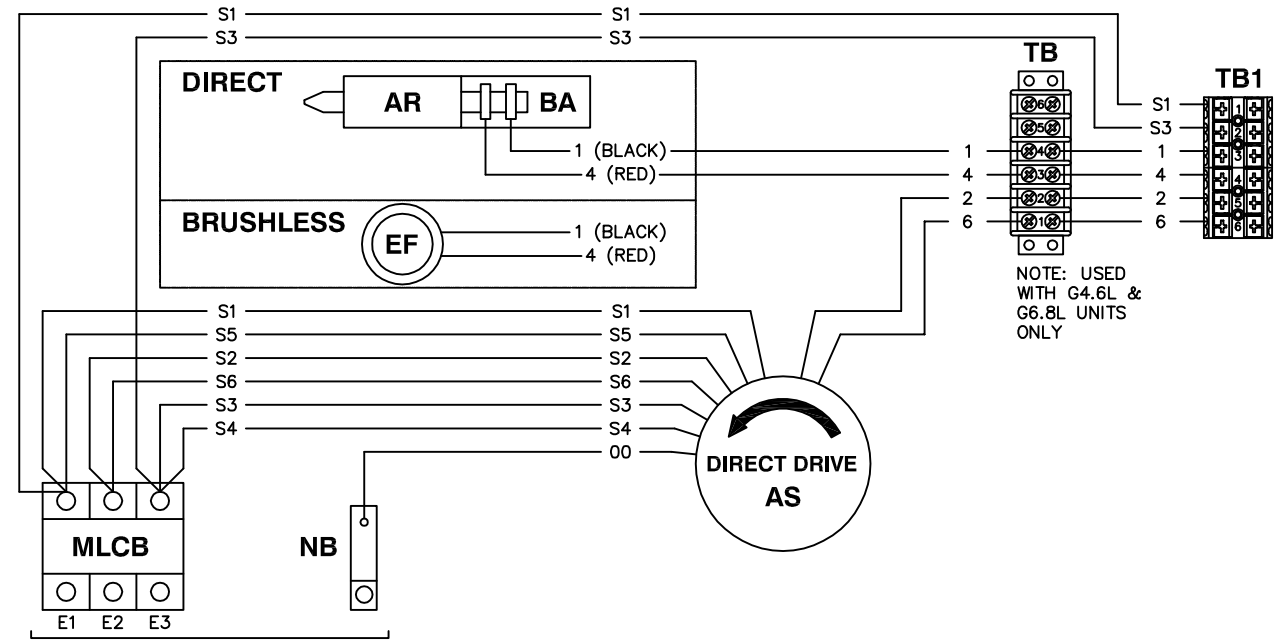

GENERATOR OUTPUT CUSTOMER CONNECTIONS
E1 TO E2
E2 TO E3 *240VAC
E1 TO E3
E3–NB = *208VAC
E1 OR E3 TO NB = *120VAC
*NOTE: THE 8TH DIGIT OF THE MODEL NUMBER SPECIFIES OUTPUT VOLTAGE
"J" = 120/240VAC 60HZ

WIRING - DIAGRAM
CPL ALTERNATOR
DRAWING #: 0H6342

REVISION: K-3026-E
DATE: 6/8/15

OPTION 5 - THREE PHASE, CPL CONTROL PANEL, GEARBOX (REVERSE ROTATION)

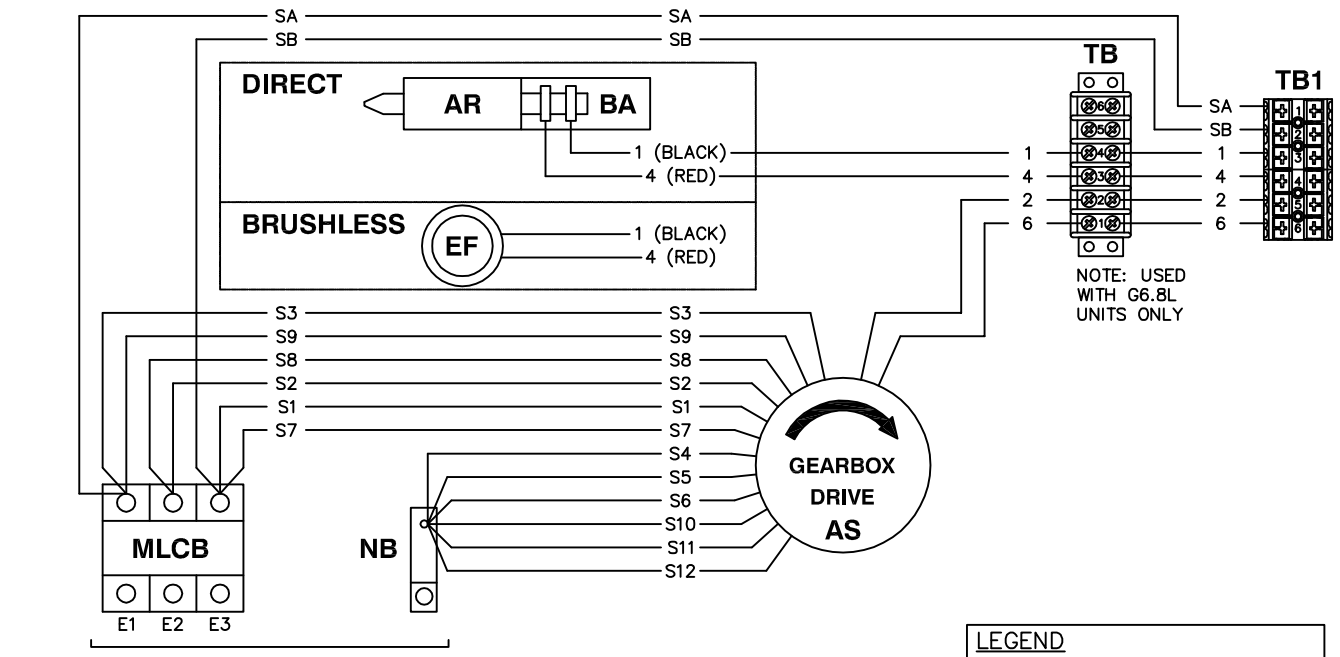

GENERATOR OUTPUT CUSTOMER CONNECTIONS
E1 TO E2
E2 TO E3 *208VAC
E1 TO E3
E1, E2 OR E3 TO NB = *120VAC
*NOTE: THE 8TH DIGIT OF THE MODEL NUMBER SPECIFIES OUTPUT VOLTAGE
"G" = 120/208VAC 60HZ

LEGEND
AR – ALTERNATOR ROTOR
AS – ALTERNATOR STATOR
BA – BRUSH ASSEMBLY
EF – EXCITER FIELD
MLCB – MAIN LINE CIRCUIT BREAKER
NB – NEUTRAL BLOCK
TB_ – TERMINAL BLOCK

OPTION 6 - THREE PHASE, CPL CONTROL PANEL, GEARBOX (REVERSE ROTATION)

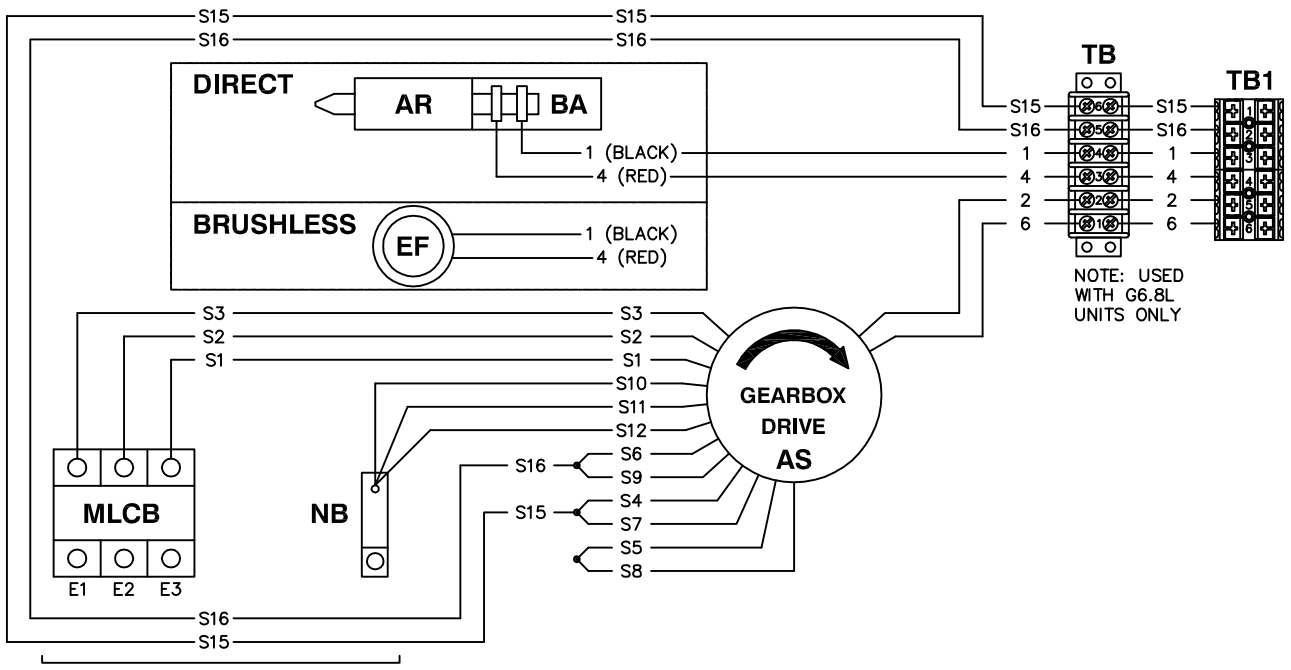

GENERATOR OUTPUT CUSTOMER CONNECTIONS
E1 TO E2
E2 TO E3 *480VAC
E1 TO E3
E1, E2 OR E3 TO NB = *277VAC
*NOTE: THE 8TH DIGIT OF THE MODEL NUMBER SPECIFIES OUTPUT VOLTAGE
"K" = 277/480VAC 60HZ

WIRING - DIAGRAM
CPL ALTERNATOR
DRAWING #: 0H6342

REVISION: K-3026-E
DATE: 6/8/15

OPTION 7 - THREE PHASE SERIES DELTA, CPL CONTROL PANEL, GEARBOX (REVERSE ROTATION)

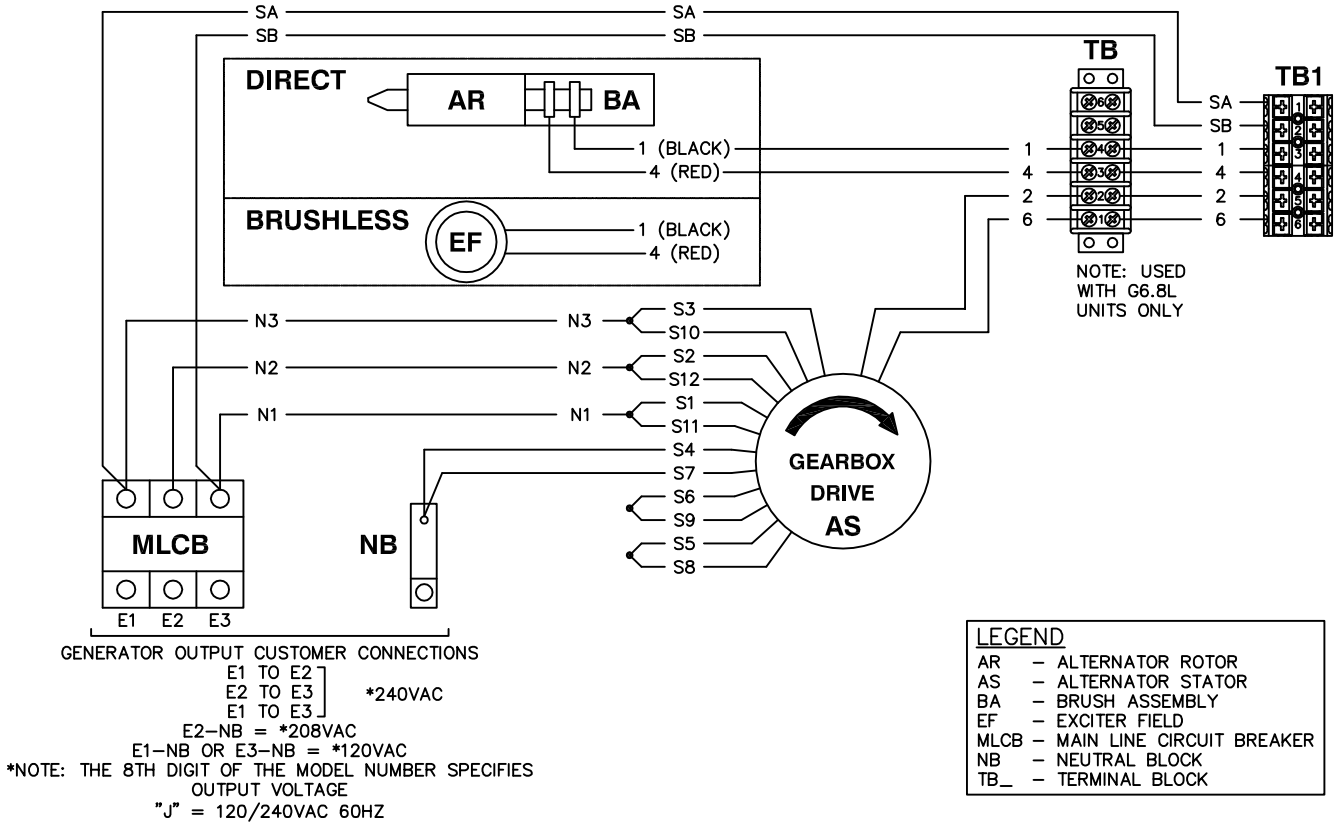

WIRING - DIAGRAM
CPL ALTERNATOR
DRAWING #: 0H6342

REVISION: K-3026-E
DATE: 6/8/15